Free Abutment - CASE 2 B/Fill + Surcharge + Deck Permanent Load + Horizontal loads at bearing.

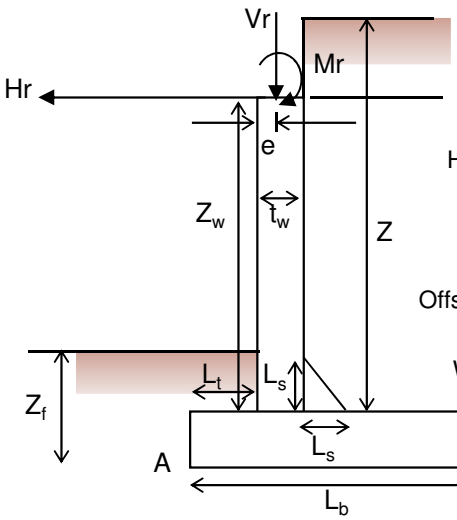

	metres
Toe Length Lt =	1.100
Wall Thickness tw =	1.000
Base Length Lb =	6.500
Height to deck soffit Zw =	6.630
Fill height on heel Z =	8.630
Base thickness tb =	1.000
Fill height at toe Zf =	0.000
Offset to bearing centre e =	0.450
Splay length Ls =	0.000
Width of abutment wall =	11.600
Lh =	4.400

$\phi'_{bf;k\ backfill}$ =	35	degrees
$\gamma_{bf;k}$ =	19	kN/m^3
$\phi'_{cv;k\ sliding}$ =	30	degrees
γ_{conc} =	25	kN/m^3
$Vr_{deck,conc}$ =	164	kN
$Vr_{deck,steel}$ =	0	kN
$MaxVr_{s'fcg}$ =	43	kN
$MinVr_{s'fcg}$ =	17	kN
$MaxVr_{gr1a}$ =	0	kN
$MinVr_{gr1a}$ =	0	kN
$MaxVr_{gr2}$ =	0	kN
$MinVr_{gr2}$ =	0	kN
$Hr_{;gr2}$ =	0	kN
$MaxVr_{gr5}$ =	0	kN
$MinVr_{gr5}$ =	0	kN
$MaxVr_{gr6}$ =	0	kN
$MinVr_{gr6}$ =	0	kN
$Hr_{;gr6}$ =	0	kN
Mr =	0	kNm
$Hr_{;elastomeric}$ =	0	kN
$Hr_{;sliding}$ =	16	kN
Carriageway width =	7.3	m

$\phi'_{bf;d\ backfill}$	SLS	Comb. 1	Comb. 2
°	35.00	35.00	29.26
K_a =	0.271	0.271	0.343
K_0 =	0.426	0.426	0.511

$\phi'_{cv;k\ sliding}$	SLS	Comb. 1	Comb. 2
$\mu_d = \tan(\phi'_{cv;k})/\gamma_M$	0.577	0.577	0.462
$c_{u;k}/\gamma_{cu}$	0	0	0

FOUNDATION DESIGN

STABILITY

Minimum Vertical Actions

	V		
	SLS	Comb.1	Comb.2
Base	162.5	154.375	162.5
Wall	165.75	157.4625	165.75
$B/fill_{heel}$	721.468	685.3946	721.468
$B/fill_{toe}$	0	0	0
ΣVr	181	171.95	181
Σ	1230.718	1169.1821	1230.718

Horizontal Actions

	H			M_A		
	SLS	Comb.1	Comb.2	SLS	Comb.1	Comb.2
$B/fill_{heel}$	238.74239	386.76267	363.08681	766.36306	1241.5082	1165.5087
$B/fill_{toe}$	0	0	0	0	0	0
S/chrge	57.833015	78.074571	84.289479	426.94516	576.37596	622.25676
ΣHr	16	21.6	16	122.08	164.808	122.08
Mr	0	0	0	0	0	0
Σ	312.5754	486.43724	463.37629	1315.3882	1982.6921	1909.8454

Sliding Resistance

	SLS	Comb.1	Comb.2		SLS	Comb.1	Comb.2
$\Sigma V\ \mu_d / \gamma_{R;h}$ =	710.55537	675.0276	568.44429	$B.c_{u;d}$ =	0	0	0
Overdesign F of S =	2.2732287	1.3876972	1.2267445	O/D F of S	0	0	0
	OK	OK	OK		0	0	0

Maximum Vertical Actions

	V			M_A		
	SLS	Comb.1	Comb.2	SLS	Comb.1	Comb.2
Base	162.5	219.375	162.5	528.125	712.96875	528.125
Wall	165.75	223.7625	165.75	265.2	358.02	265.2
$B/fill_{heel}$	721.468	973.9818	721.468	3102.3124	4188.1217	3102.3124
$B/fill_{toe}$	0	0	0	0	0	0
S/chrge	0	0	0	0	0	0
ΣVr	207	273	207	320.85	423.15	320.85
Mr	0	0	0	0	0	0
Σ	1256.718	1690.1193	1256.718	4216.4874	5682.2605	4216.4874

Eccentricity of Vertical Loads from Centre-Line of Base

	SLS	Comb.1	Comb.2
ΣM / V	0.9415273	1.0610608	1.4145508

PD 6694-1 Cl. 5.2.2 requires no uplift at SLS

Bearing Pressure at Toe at SLS = 361.37451 OK

Bearing Pressure at Heel at SLS = 25.307955 OK

Settlement Check (PD 6694-1 Cl. 5.5.2)

Drained Conditions 1/3(R/A') = 436.57294 OK

Unrained Conditions 1/3(R/A') = 0

BS EN 1997-1 Cl. 6.5.4 - Eccentricity restricted to $L_b/3$ at ULS

Lb / 3 = 2.17

Eccentricity under Comb.1 = 1.06 < 2.17 OK

Eccentricity under Comb.2 = 1.41 < 2.17 OK

	Comb.1	Comb.2	
Pressure at Toe at ULS =	386.06	342.35	
Drained R/A' =	1070.22	360.16	OK
Undrained R/A' =	0.00	0.00	

Use rectangular pressure distribution under the base at ULS (see EN 1997-1:2004 Annex D Figure D.1)

Effective foundation breadth for Comb.1; B' = B-2e = 4.378

Effective foundation breadth for Comb.2; B' = B-2e = 3.671

WALL DESIGN *(Notation: Positive moments produce tension in rear face of wall.)*

(Using K_0 Pressures)		Comb.1	Comb.2	Permanent	Surcharge	Variable		Comb.1	Comb.2
Section	Depth (m)	ULS Shear	ULS Shear	SLS Moment	SLS Moment	SLS Moment	SLS Moment	ULS Moment	ULS Moment
(Z-Zw)/2	1.000	83.25	78.09	1.35	0.00	40.91	42.26	57.41	48.99
Z-Zw	2.000	103.65	96.31	10.80	0.00	56.25	67.05	93.44	80.23
Zw/8	2.829	134.85	124.67	40.92	109.61	13.26	163.79	229.05	218.73
Zw/4	3.658	175.06	161.05	76.42	148.41	26.52	251.35	356.84	336.57
3Zw/8	4.486	224.29	205.43	132.28	190.24	39.78	362.30	521.70	487.88
Zw/2	5.315	282.53	257.81	213.10	235.10	53.04	501.24	731.09	679.28
5Zw/8	6.144	349.79	318.20	323.49	282.99	66.30	672.79	992.49	917.41
3Zw/4	6.973	426.06	386.60	468.08	333.91	79.56	881.55	1313.36	1208.92
7Zw/8	7.801	511.35	463.01	651.47	387.86	92.82	1132.15	1701.18	1560.42
Splay top	8.630	605.65	547.42	878.26	444.84	106.08	1429.18	2163.41	1978.57
Zw	8.630	605.65	547.42	878.26	444.84	106.08	1429.18	2163.41	1978.57

BASE DESIGN

	SLS	Comb.1	Comb.2
Bearing Pressure at Toe :	444.09949	498.51	479.88
Bearing Pressure at d from Front of Wall :	430.36759	498.5086	479.87819
Bearing Pressure at Front of Wall :	357.78466	498.51	479.88
Bearing Pressure at Back of Wall :	279.31664	498.51	479.88
Bearing Pressure at Bottom of Splay :	279.31664	498.51	479.88

Assume d = t_b-75mm = 0.925

(Notation: Positive moments produce tension in bottom face of base slab.)

(Using K_0 Pressures)	Comb.1	Comb.2	Permanent	Surcgarge + Variable		Comb.1	Comb.2
Section	ULS Shear	ULS Shear	SLS Moment	SLS Moment	SLS Moment	ULS Moment	ULS Moment
At d from front of wall	81.33	79.60	5.13	1.22	6.35	7.12	6.97
At front of wall	511.23	500.37	193.00	43.15	236.15	281.18	275.20
At back of wall	479.23	582.49	-859.73	-379.63	-1239.36	-2054.45	-1764.64
At bottom of splay	479.23	582.49	-859.73	-379.63	-1239.36	-2054.45	-1764.64
B' = B - 2e (metres)	3.390	2.619					
At B' from toe	793.301	733.425					

Free Abutment - CASE 3 B/Fill + Normal Surcharge + Deck Permanent Load + gr1a on deck.

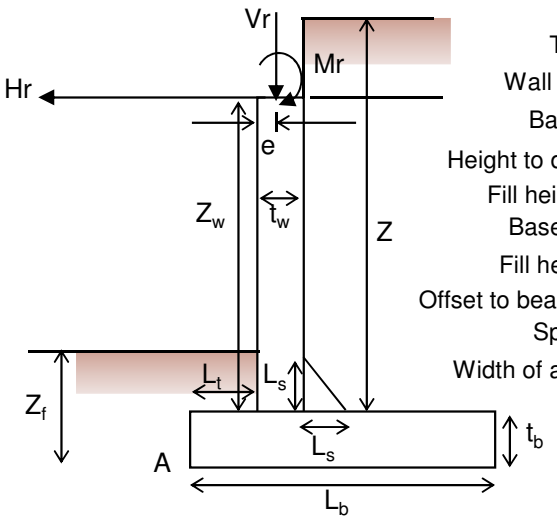

	metres			
Toe Length Lt =	1.100	$\phi'_{bf;k\ backfill}$ =	35	degrees
Wall Thickness tw =	1.000	$\gamma_{bf;k}$ =	19	kN/m^3
Base Length Lb =	6.500	$\phi'_{cv;k\ sliding}$ =	30	degrees
Height to deck soffit Zw =	6.630	γ_{conc} =	25	kN/m^3
Fill height on heel Z =	8.630	$Vr_{deck,conc}$ =	164	kN
Base thickness tb =	1.000	$Vr_{deck,steel}$ =	0	kN
Fill height at toe Zf =	0.000	$MaxVr_{s'fcg}$ =	43	kN
Offset to bearing centre e =	0.450	$MinVr_{s'fcg}$ =	17	kN
Splay length Ls =	0.000	$MaxVr_{gr1a}$ =	128	kN
Width of abutment wall =	11.600	$MinVr_{gr1a}$ =	0	kN
Lh =	4.400	$MaxVr_{gr2}$ =	0	kN
		$MinVr_{gr2}$ =	0	kN
		$Hr_{;gr2}$ =	0	kN
		$MaxVr_{gr5}$ =	0	kN
		$MinVr_{gr5}$ =	0	kN
		$MaxVr_{gr6}$ =	0	kN
		$MinVr_{gr6}$ =	0	kN
		$Hr_{;gr6}$ =	0	kN
		Mr =	0	kNm
		$Hr_{;elastomeric}$ =	0	kN
		$Hr_{;sliding}$ =	0	kN
		Carriageway width =	7.3	m

$\phi'_{bf;d\ backfill}$	SLS	Comb. 1	Comb. 2
°	35.00	35.00	29.26
K_a =	0.271	0.271	0.343
K_0 =	0.426	0.426	0.511

$\phi'_{cv;k\ sliding}$	SLS	Comb. 1	Comb. 2
$\mu_d = \tan(\phi'_{cv;k})/\gamma_M$	0.577	0.577	0.462
$c_{u;k}/\gamma_{cu}$	0	0	0

FOUNDATION DESIGN

STABILITY

Minimum Vertical Actions

	V		
	SLS	Comb.1	Comb.2
Base	162.5	154.375	162.5
Wall	165.75	157.4625	165.75
$B/fill_{heel}$	721.468	685.3946	721.468
$B/fill_{toe}$	0	0	0
ΣVr	181	171.95	181
Σ	1230.718	1169.1821	1230.718

Horizontal Actions

	H			M_A		
	SLS	Comb.1	Comb.2	SLS	Comb.1	Comb.2
$B/fill_{heel}$	238.74239	386.76267	363.08681	766.36306	1241.5082	1165.5087
$B/fill_{toe}$	0	0	0	0	0	0
S/chrge	57.833015	78.074571	84.289479	426.94516	576.37596	622.25676
ΣHr	0	0	0	0	0	0
Mr	0	0	0	0	0	0
Σ	296.5754	464.83724	447.37629	1193.3082	1817.8841	1787.7654

Sliding Resistance

	SLS	Comb.1	Comb.2		SLS	Comb.1	Comb.2
$\Sigma V\ \mu_d / \gamma_{R;h}$ =	710.55537	675.0276	568.44429	$B.c_{u;d}$ =	0	0	0
Overdesign F of S =	2.3958675	1.4521806	1.2706179	O/D F of S	0	0	0
	OK	OK	OK		0	0	0

Maximum Vertical Actions

	V			M_A		
	SLS	Comb.1	Comb.2	SLS	Comb.1	Comb.2
Base	162.5	219.375	162.5	528.125	712.96875	528.125
Wall	165.75	223.7625	165.75	265.2	358.02	265.2
$B/fill_{heel}$	721.468	973.9818	721.468	3102.3124	4188.1217	3102.3124
$B/fill_{toe}$	0	0	0	0	0	0
S/chrge	0	0	0	0	0	0
ΣVr	335	445.8	354.2	519.25	690.99	549.01
Mr	0	0	0	0	0	0
Σ	1384.718	1862.9193	1403.918	4414.8874	5950.1005	4444.6474

Eccentricity of Vertical Loads from Centre-Line of Base

	SLS	Comb.1	Comb.2
ΣM / V	0.9234763	1.0318597	1.3575234

PD 6694-1 Cl. 5.2.2 requires no uplift at SLS

Bearing Pressure at Toe at SLS = 394.63178 OK

Bearing Pressure at Heel at SLS = 31.435292 OK

Settlement Check (PD 6694-1 Cl. 5.5.2)

Drained Conditions 1/3(R/A') = 485.0979 OK

Unrained Conditions 1/3(R/A') = 0

BS EN 1997-1 Cl. 6.5.4 - Eccentricity restricted to $L_b/3$ at ULS

Lb / 3 = 2.17

Eccentricity under Comb.1 = 1.03 < 2.17 OK

Eccentricity under Comb.2 = 1.36 < 2.17 OK

	Comb.1	Comb.2	
Pressure at Toe at ULS =	419.93	370.92	
Drained R/A' =	1212.26	430.98	OK
Undrained R/A' =	0.00	0.00	

Use rectangular pressure distribution under the base at ULS (see EN 1997-1:2004 Annex D Figure D.1)

Effective foundation breadth for Comb.1; B' = B-2e = 4.436

Effective foundation breadth for Comb.2; B' = B-2e = 3.785

WALL DESIGN *(Notation: Positive moments produce tension in rear face of wall.)*

(Using K_0 Pressures)		Comb.1	Comb.2	Permanent	Surcharge	Variable		Comb.1	Comb.2
Section	Depth (m)	ULS Shear	ULS Shear	SLS Moment	SLS Moment	SLS Moment	SLS Moment	ULS Moment	ULS Moment
(Z-Zw)/2	1.000	61.79	62.09	1.35	0.00	40.91	42.26	57.41	48.99
Z-Zw	2.000	82.05	80.31	10.80	0.00	56.25	67.05	93.44	80.23
Zw/8	2.829	113.25	108.67	40.92	109.61	6.40	156.93	219.79	212.83
Zw/4	3.658	153.46	145.05	76.42	148.41	6.40	231.23	329.68	317.41
3Zw/8	4.486	202.69	189.43	132.28	190.24	6.40	328.92	476.64	455.46
Zw/2	5.315	260.93	241.81	213.10	235.10	6.40	454.60	668.13	633.60
5Zw/8	6.144	328.19	302.20	323.49	282.99	6.40	612.89	911.62	858.47
3Zw/4	6.973	404.46	370.60	468.08	333.91	6.40	808.39	1214.59	1136.72
7Zw/8	7.801	489.75	447.01	651.47	387.86	6.40	1045.73	1584.51	1474.96
Splay top	8.630	584.05	531.42	878.26	444.84	6.40	1329.50	2028.84	1879.85
Zw	8.630	584.05	531.42	878.26	444.84	6.40	1329.50	2028.84	1879.85

BASE DESIGN

	SLS	Comb.1	Comb.2
Bearing Pressure at Toe :	474.96807	526.20	493.78
Bearing Pressure at d from Front of Wall :	460.71279	526.19574	493.7825
Bearing Pressure at Front of Wall :	385.36349	526.20	493.78
Bearing Pressure at Back of Wall :	303.90479	526.20	493.78
Bearing Pressure at Bottom of Splay :	303.90479	526.20	493.78

Assume d = t_b-75mm = 0.925

(Notation: Positive moments produce tension in bottom face of base slab.)

(Using K_0 Pressures)	Comb.1	Comb.2	Permanent	Surcgarge + Variable		Comb.1	Comb.2
Section	ULS Shear	ULS Shear	SLS Moment	SLS Moment	SLS Moment	ULS Moment	ULS Moment
At d from front of wall	86.18	82.04	4.87	1.95	6.82	7.54	7.18
At front of wall	541.69	515.66	183.69	70.47	254.16	297.93	283.61
At back of wall	364.57	464.49	-767.65	-356.59	-1124.23	-1923.63	-1692.86
At bottom of splay	364.57	464.49	-767.65	-356.59	-1124.23	-1923.63	-1692.86
B' = B - 2e (metres)	3.540	2.843					
At B' from toe	755.034	691.027					

Free Abutment - CASE 4 B/Fill + (SV/100 & 169) or SOV Surcharge + Deck Permanent Load + gr1a(frequent

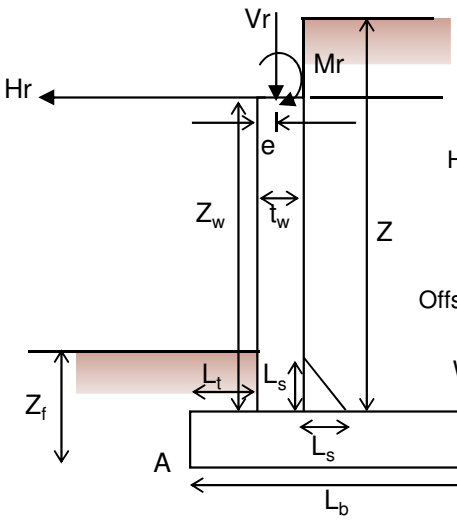

	metres			
Toe Length Lt =	1.100	$\phi'_{bf;k\ backfill}$ =	35	degrees
Wall Thickness tw =	1.000	$\gamma_{bf;k}$ =	19	kN/m^3
Base Length Lb =	6.500	$\phi'_{cv;k\ sliding}$ =	30	degrees
Height to deck soffit Zw =	6.630	γ_{conc} =	25	kN/m^3
Fill height on heel Z =	8.630	$Vr_{deck,conc}$ =	164	kN
Base thickness tb =	1.000	$Vr_{deck,steel}$ =	0	kN
Fill height at toe Zf =	0.000	$MaxVr_{s'fcg}$ =	43	kN
Offset to bearing centre e =	0.450	$MinVr_{s'fcg}$ =	17	kN
Splay length Ls =	0.000	$MaxVr_{gr1a}$ =	128	kN
Width of abutment wall =	11.600	$MinVr_{gr1a}$ =	0	kN
Lh =	4.400	$MaxVr_{gr2}$ =	0	kN
		$MinVr_{gr2}$ =	0	kN
		$Hr_{;gr2}$ =	0	kN
		$MaxVr_{gr5}$ =	0	kN
		$MinVr_{gr5}$ =	0	kN
		$MaxVr_{gr6}$ =	0	kN
		$MinVr_{gr6}$ =	0	kN
		$Hr_{;gr6}$ =	0	kN
		Mr =	0	kNm
		$Hr_{;elastomeric}$ =	0	kN
		$Hr_{;sliding}$ =	0	kN
		Carriageway width =	7.3	m

$\phi'_{bf;d\ backfill}$	SLS	Comb. 1	Comb. 2
°	35.00	35.00	29.26
K_a =	0.271	0.271	0.343
K_0 =	0.426	0.426	0.511

$\phi'_{cv;k\ sliding}$	SLS	Comb. 1	Comb. 2
$\mu_d = \tan(\phi'_{cv;k})/\gamma_M$	0.577	0.577	0.462
$c_{u;k}/\gamma_{cu}$	0	0	0

FOUNDATION DESIGN

STABILITY

Minimum Vertical Actions

	V		
	SLS	Comb.1	Comb.2
Base	162.5	154.375	162.5
Wall	165.75	157.4625	165.75
$B/fill_{heel}$	721.468	685.3946	721.468
$B/fill_{toe}$	0	0	0
ΣVr	181	171.95	181
Σ	1230.718	1169.1821	1230.718

Horizontal Actions

	H			M_A		
	SLS	Comb.1	Comb.2	SLS	Comb.1	Comb.2
$B/fill_{heel}$	238.74239	386.76267	363.08681	766.36306	1241.5082	1165.5087
$B/fill_{toe}$	0	0	0	0	0	0
S/chrge	57.352942	77.426472	83.58979	406.07371	548.19951	591.8374
ΣHr	0	0	0	0	0	0
Mr	0	0	0	0	0	0
Σ	296.09533	464.18914	446.6766	1172.4368	1789.7077	1757.346

Sliding Resistance

	SLS	Comb.1	Comb.2		SLS	Comb.1	Comb.2
$\Sigma V\ \mu_d / \gamma_{R;h}$ =	710.55537	675.0276	568.44429	$B.c_{u;d}$ =	0	0	0
Overdesign F of S =	2.399752	1.4542081	1.2726082	O/D F of S	0	0	0
	OK	OK	OK		0	0	0

Maximum Vertical Actions

	V			M_A		
	SLS	Comb.1	Comb.2	SLS	Comb.1	Comb.2
Base	162.5	219.375	162.5	528.125	712.96875	528.125
Wall	165.75	223.7625	165.75	265.2	358.02	265.2
$B/fill_{heel}$	721.468	973.9818	721.468	3102.3124	4188.1217	3102.3124
$B/fill_{toe}$	0	0	0	0	0	0
S/chrge	0	0	0	0	0	0
ΣVr	303	402.6	317.4	469.65	624.03	491.97
Mr	0	0	0	0	0	0
Σ	1352.718	1819.7193	1367.118	4365.2874	5883.1405	4387.6074

Eccentricity of Vertical Loads from Centre-Line of Base

	SLS	Comb.1	Comb.2
ΣM / V	0.8896776	1.0005141	1.3260539

PD 6694-1 Cl. 5.2.2 requires no uplift at SLS

Bearing Pressure at Toe at SLS = 379.01927 OK

Bearing Pressure at Heel at SLS = 37.201652 OK

Settlement Check (PD 6694-1 Cl. 5.5.2)

Drained Conditions 1/3(R/A') = 482.72136 OK

Unrained Conditions 1/3(R/A') = 0

BS EN 1997-1 Cl. 6.5.4 - Eccentricity restricted to $L_b/3$ at ULS

Lb / 3 = 2.17

Eccentricity under Comb.1 = 1.00 < 2.17 OK

Eccentricity under Comb.2 = 1.33 < 2.17 OK

	Comb.1	Comb.2	
Pressure at Toe at ULS =	404.47	355.29	
Drained R/A' =	1202.18	423.62	OK
Undrained R/A' =	0.00	0.00	

Use rectangular pressure distribution under the base at ULS (see EN 1997-1:2004 Annex D Figure D.1)

Effective foundation breadth for Comb.1; B' = B-2e = 4.499

Effective foundation breadth for Comb.2; B' = B-2e = 3.848

WALL DESIGN *(Notation: Positive moments produce tension in rear face of wall.)*

(Using K_0 Pressures)		Comb.1	Comb.2	Permanent	Surcharge	Variable		Comb.1	Comb.2
Section	Depth (m)	ULS Shear	ULS Shear	SLS Moment	SLS Moment	SLS Moment	SLS Moment	ULS Moment	ULS Moment
(Z-Zw)/2	1.000	61.79	56.58	1.35	0.00	40.91	42.26	57.41	48.99
Z-Zw	2.000	78.05	76.23	10.80	0.00	56.25	67.05	93.44	80.23
Zw/8	2.829	109.87	105.22	40.92	100.33	6.40	147.64	207.24	200.02
Zw/4	3.658	150.70	142.22	76.42	137.24	6.40	220.06	314.59	302.00
3Zw/8	4.486	200.54	187.23	132.28	177.56	6.40	316.24	459.52	437.97
Zw/2	5.315	259.40	240.25	213.10	221.29	6.40	440.79	649.48	614.56
5Zw/8	6.144	327.28	301.27	323.49	268.43	6.40	598.33	891.97	838.40
3Zw/4	6.973	404.17	370.30	468.08	318.98	6.40	793.46	1194.44	1116.13
7Zw/8	7.801	490.07	447.34	651.47	372.94	6.40	1030.80	1564.36	1454.38
Splay top	8.630	584.99	532.38	878.26	430.30	6.40	1314.96	2009.22	1859.80
Zw	8.630	584.99	532.38	878.26	430.30	6.40	1314.96	2009.22	1859.80

BASE DESIGN

	SLS	Comb.1	Comb.2
Bearing Pressure at Toe :	459.4202	509.59	477.40
Bearing Pressure at d from Front of Wall :	445.76742	509.59133	477.4047
Bearing Pressure at Front of Wall :	373.60275	509.59	477.40
Bearing Pressure at Back of Wall :	295.58689	509.59	477.40
Bearing Pressure at Bottom of Splay :	295.58689	509.59	477.40

Assume d = t_b-75mm = 0.925

(Notation: Positive moments produce tension in bottom face of base slab.)

(Using K_0 Pressures)	Comb.1	Comb.2	Permanent	Surcgarge + Variable		Comb.1	Comb.2
Section	ULS Shear	ULS Shear	SLS Moment	SLS Moment	SLS Moment	ULS Moment	ULS Moment
At d from front of wall	83.27	79.17	4.87	1.71	6.58	7.29	6.93
At front of wall	523.43	497.65	183.69	61.82	245.52	287.88	273.70
At back of wall	372.90	466.90	-767.65	-354.39	-1122.04	-1918.17	-1690.03
At bottom of splay	372.90	466.90	-767.65	-354.39	-1122.04	-1918.17	-1690.03
B' = B - 2e (metres)	3.571	2.864					
At B' from toe	747.231	687.162					

Free Abutment - CASE 5 B/Fill + Normal Surcharge(frequent) + Deck Permanent Load + gr5 on deck.

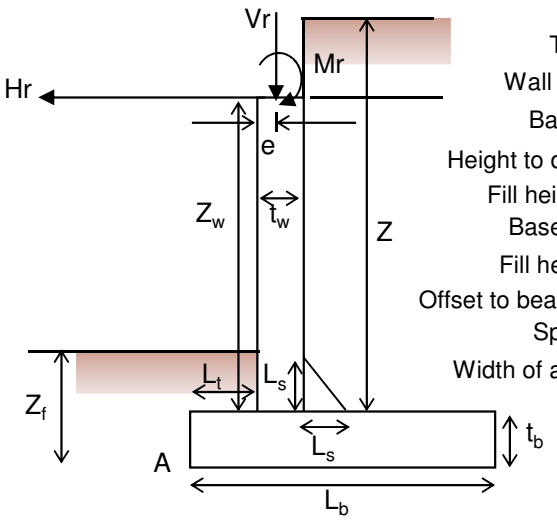

	metres			
Toe Length Lt =	1.100	$\phi'_{bf;k\ backfill}$ =	35	degrees
Wall Thickness tw =	1.000	$\gamma_{bf;k}$ =	19	kN/m^3
Base Length Lb =	6.500	$\phi'_{cv;k\ sliding}$ =	30	degrees
Height to deck soffit Zw =	6.630	γ_{conc} =	25	kN/m^3
Fill height on heel Z =	8.630	$Vr_{deck,conc}$ =	164	kN
Base thickness tb =	1.000	$Vr_{deck,steel}$ =	0	kN
Fill height at toe Zf =	0.000	$MaxVr_{s'fcg}$ =	43	kN
Offset to bearing centre e =	0.450	$MinVr_{s'fcg}$ =	17	kN
Splay length Ls =	0.000	$MaxVr_{gr1a}$ =	0	kN
Width of abutment wall =	11.600	$MinVr_{gr1a}$ =	0	kN
Lh =	4.400	$MaxVr_{gr2}$ =	0	kN
		$MinVr_{gr2}$ =	0	kN
		$Hr_{;gr2}$ =	0	kN
		$MaxVr_{gr5}$ =	166	kN
		$MinVr_{gr5}$ =	0	kN
		$MaxVr_{gr6}$ =	0	kN
		$MinVr_{gr6}$ =	0	kN
		$Hr_{;gr6}$ =	0	kN
		Mr =	0	kNm
		$Hr_{;elastomeric}$ =	0	kN
		$Hr_{;sliding}$ =	0	kN
		Carriageway width =	7.3	m

$\phi'_{bf;d\ backfill}$	SLS	Comb. 1	Comb. 2
°	35.00	35.00	29.26
K_a =	0.271	0.271	0.343
K_0 =	0.426	0.426	0.511

$\phi'_{cv;k\ sliding}$	SLS	Comb. 1	Comb. 2
$\mu_d = \tan(\phi'_{cv;k})/\gamma_M$	0.577	0.577	0.462
$c_{u;k}/\gamma_{cu}$	0	0	0

FOUNDATION DESIGN

STABILITY

Minimum Vertical Actions

	V		
	SLS	Comb.1	Comb.2
Base	162.5	154.375	162.5
Wall	165.75	157.4625	165.75
$B/fill_{heel}$	721.468	685.3946	721.468
$B/fill_{toe}$	0	0	0
ΣVr	181	171.95	181
Σ	1230.718	1169.1821	1230.718

Horizontal Actions

	H			M_A		
	SLS	Comb.1	Comb.2	SLS	Comb.1	Comb.2
$B/fill_{heel}$	238.74239	386.76267	363.08681	766.36306	1241.5082	1165.5087
$B/fill_{toe}$	0	0	0	0	0	0
S/chrge	43.374762	58.555928	63.217109	320.20887	432.28197	466.69257
ΣHr	0	0	0	0	0	0
Mr	0	0	0	0	0	0
Σ	282.11715	445.31859	426.30392	1086.5719	1673.7901	1632.2012

Sliding Resistance

	SLS	Comb.1	Comb.2		SLS	Comb.1	Comb.2
$\Sigma V\ \mu_d / \gamma_{R;h}$ =	710.55537	675.0276	568.44429	$B.c_{u;d}$ =	0	0	0
Overdesign F of S =	2.5186536	1.5158307	1.333425	O/D F of S	0	0	0
	OK	OK	OK		0	0	0

Maximum Vertical Actions

	V			M_A		
	SLS	Comb.1	Comb.2	SLS	Comb.1	Comb.2
Base	162.5	219.375	162.5	528.125	712.96875	528.125
Wall	165.75	223.7625	165.75	265.2	358.02	265.2
$B/fill_{heel}$	721.468	973.9818	721.468	3102.3124	4188.1217	3102.3124
$B/fill_{toe}$	0	0	0	0	0	0
S/chrge	0	0	0	0	0	0
ΣVr	373	497.1	397.9	578.15	770.505	616.745
Mr	0	0	0	0	0	0
Σ	1422.718	1914.2193	1447.618	4473.7874	6029.6155	4512.3824

Eccentricity of Vertical Loads from Centre-Line of Base

	SLS	Comb.1	Comb.2
ΣM / V	0.8691941	0.9744899	1.2603997

PD 6694-1 Cl. 5.2.2 requires no uplift at SLS

Bearing Pressure at Toe at SLS = 394.49409 > 0 OK

Bearing Pressure at Heel at SLS = 43.265298 > 0 OK

Settlement Check (PD 6694-1 Cl. 5.5.2)

Drained Conditions 1/3(R/A') = 514.44726 OK

Unrained Conditions 1/3(R/A') = 0

BS EN 1997-1 Cl. 6.5.4 - Eccentricity restricted to $L_b/3$ at ULS

Lb / 3 = 2.17

Eccentricity under Comb.1 = 0.97 < 2.17 OK

Eccentricity under Comb.2 = 1.26 < 2.17 OK

	Comb.1	Comb.2	
Pressure at Toe at ULS =	420.61	363.80	
Drained R/A' =	1293.57	476.87	OK
Undrained R/A' =	0.00	0.00	

Use rectangular pressure distribution under the base at ULS (see EN 1997-1:2004 Annex D Figure D.1)

Effective foundation breadth for Comb.1; B' = B-2e = 4.551

Effective foundation breadth for Comb.2; B' = B-2e = 3.979

WALL DESIGN *(Notation: Positive moments produce tension in rear face of wall.)*

(Using K_0 Pressures)		Comb.1	Comb.2	Permanent	Surcharge	Variable		Comb.1	Comb.2
Section	Depth (m)	ULS Shear	ULS Shear	SLS Moment	SLS Moment	SLS Moment	SLS Moment	ULS Moment	ULS Moment
(Z-Zw)/2	1.000	61.79	52.87	1.35	0.00	40.91	42.26	57.41	48.99
Z-Zw	2.000	68.10	66.06	10.80	0.00	56.25	67.05	93.44	80.23
Zw/8	2.829	98.07	93.17	40.92	82.21	8.30	131.43	185.36	177.23
Zw/4	3.658	137.04	128.28	76.42	111.31	8.30	196.03	282.16	268.44
3Zw/8	4.486	185.04	171.40	132.28	142.68	8.30	283.26	415.00	392.06
Zw/2	5.315	242.05	222.52	213.10	176.33	8.30	397.72	591.35	554.74
5Zw/8	6.144	308.07	281.66	323.49	212.25	8.30	544.04	818.68	763.11
3Zw/4	6.973	383.11	348.79	468.08	250.43	8.30	726.81	1104.46	1023.80
7Zw/8	7.801	467.16	423.94	651.47	290.90	8.30	950.66	1456.17	1343.45
Splay top	8.630	560.23	507.09	878.26	333.63	8.30	1220.19	1881.27	1728.69
Zw	8.630	560.23	507.09	878.26	333.63	8.30	1220.19	1881.27	1728.69

BASE DESIGN

	SLS	Comb.1	Comb.2
Bearing Pressure at Toe :	468.60689	515.81	467.36
Bearing Pressure at d from Front of Wall :	455.10151	515.81185	467.35587
Bearing Pressure at Front of Wall :	383.71598	515.81	467.36
Bearing Pressure at Back of Wall :	306.54242	515.81	467.36
Bearing Pressure at Bottom of Splay :	306.54242	515.81	467.36

Assume d = t_b-75mm = 0.925

(Notation: Positive moments produce tension in bottom face of base slab.)

(Using K_0 Pressures)	Comb.1	Comb.2	Permanent	Surcgarge + Variable		Comb.1	Comb.2
Section	ULS Shear	ULS Shear	SLS Moment	SLS Moment	SLS Moment	ULS Moment	ULS Moment
At d from front of wall	84.36	77.41	4.87	1.85	6.72	7.38	6.77
At front of wall	530.27	486.59	183.69	67.57	251.26	291.65	267.63
At back of wall	291.47	365.30	-767.65	-255.49	-1023.14	-1800.04	-1596.74
At bottom of splay	291.47	365.30	-767.65	-255.49	-1023.14	-1800.04	-1596.74
B' = B - 2e (metres)	3.711	3.097					
At B' from toe	711.480	642.977					

Free Abutment - CASE 6 B/Fill + Normal Surcharge(frequent) + Deck Permanent Load + gr2 on deck.

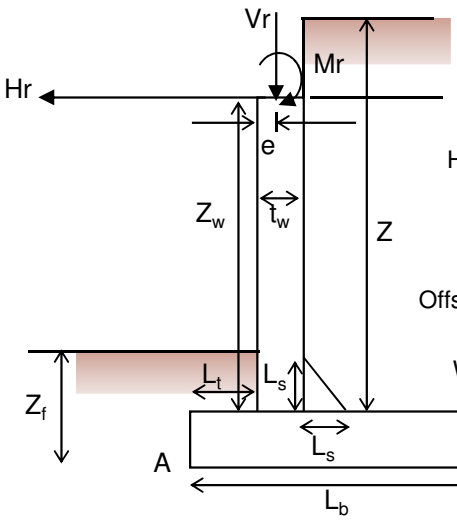

	metres			
Toe Length Lt =	1.100	$\phi'_{bf;k\ backfill}$ =	35	degrees
Wall Thickness tw =	1.000	$\gamma_{bf;k}$ =	19	kN/m^3
Base Length Lb =	6.500	$\phi'_{cv;k\ sliding}$ =	30	degrees
Height to deck soffit Zw =	6.630	γ_{conc} =	25	kN/m^3
Fill height on heel Z =	8.630	$Vr_{deck,conc}$ =	164	kN
Base thickness tb =	1.000	$Vr_{deck,steel}$ =	0	kN
Fill height at toe Zf =	0.000	$MaxVr_{s'fcg}$ =	43	kN
Offset to bearing centre e =	0.450	$MinVr_{s'fcg}$ =	17	kN
Splay length Ls =	0.000	$MaxVr_{gr1a}$ =	0	kN
Width of abutment wall =	11.600	$MinVr_{gr1a}$ =	0	kN
Lh =	4.400	$MaxVr_{gr2}$ =	89	kN
		$MinVr_{gr2}$ =	0	kN
		$Hr_{;gr2}$ =	0	kN
		$MaxVr_{gr5}$ =	0	kN
		$MinVr_{gr5}$ =	0	kN
		$MaxVr_{gr6}$ =	0	kN
		$MinVr_{gr6}$ =	0	kN
		$Hr_{;gr6}$ =	0	kN
		Mr =	0	kNm
		$Hr_{;elastomeric}$ =	0	kN
		$Hr_{;sliding}$ =	0	kN
		Carriageway width =	7.3	m

$\phi'_{bf;d\ backfill}$	SLS	Comb. 1	Comb. 2
°	35.00	35.00	29.26
Ka =	0.271	0.271	0.343
K0 =	0.426	0.426	0.511

$\phi'_{cv;k\ sliding}$	SLS	Comb. 1	Comb. 2
$\mu_d = \tan(\phi'_{cv;k})/\gamma_M$	0.577	0.577	0.462
$c_{u;k}/\gamma_{cu}$	0	0	0

FOUNDATION DESIGN

STABILITY

Minimum Vertical Actions

	V		
	SLS	Comb.1	Comb.2
Base	162.5	154.375	162.5
Wall	165.75	157.4625	165.75
$B/fill_{heel}$	721.468	685.3946	721.468
$B/fill_{toe}$	0	0	0
ΣVr	181	171.95	181
Σ	1230.718	1169.1821	1230.718

Horizontal Actions

	H			M_A		
	SLS	Comb.1	Comb.2	SLS	Comb.1	Comb.2
$B/fill_{heel}$	238.74239	386.76267	363.08681	766.36306	1241.5082	1165.5087
$B/fill_{toe}$	0	0	0	0	0	0
S/chrge	43.374762	58.555928	63.217109	320.20887	432.28197	466.69257
ΣHr	0	0	0	0	0	0
Mr	0	0	0	0	0	0
Σ	282.11715	445.31859	426.30392	1086.5719	1673.7901	1632.2012

Sliding Resistance

	SLS	Comb.1	Comb.2		SLS	Comb.1	Comb.2
$\Sigma V\ \mu_d / \gamma_{R;h}$ =	710.55537	675.0276	568.44429	$B.c_{u;d}$ =	0	0	0
Overdesign F of S =	2.5186536	1.5158307	1.333425	O/D F of S	0	0	0
	OK	OK	OK		0	0	0

Maximum Vertical Actions

	V			M_A		
	SLS	Comb.1	Comb.2	SLS	Comb.1	Comb.2
Base	162.5	219.375	162.5	528.125	712.96875	528.125
Wall	165.75	223.7625	165.75	265.2	358.02	265.2
$B/fill_{heel}$	721.468	973.9818	721.468	3102.3124	4188.1217	3102.3124
$B/fill_{toe}$	0	0	0	0	0	0
S/chrge	0	0	0	0	0	0
ΣVr	296	393.15	309.35	458.8	609.3825	479.4925
Mr	0	0	0	0	0	0
Σ	1345.718	1810.2693	1359.068	4354.4374	5868.493	4375.1299

Eccentricity of Vertical Loads from Centre-Line of Base

	SLS	Comb.1	Comb.2
ΣM / V	0.8216566	0.9328294	1.2317576

PD 6694-1 Cl. 5.2.2 requires no uplift at SLS

Bearing Pressure at Toe at SLS = 364.05858 > 0 OK

Bearing Pressure at Heel at SLS = 50.008493 > 0 OK

Settlement Check (PD 6694-1 Cl. 5.5.2)

Drained Conditions 1/3(R/A') = 504.1481 OK

Unrained Conditions 1/3(R/A') = 0

BS EN 1997-1 Cl. 6.5.4 - Eccentricity restricted to $L_b/3$ at ULS

Lb / 3 = 2.17

Eccentricity under Comb.1 = 0.93 < 2.17 OK

Eccentricity under Comb.2 = 1.23 < 2.17 OK

	Comb.1	Comb.2	
Pressure at Toe at ULS =	390.62	336.70	
Drained R/A' =	1257.17	452.63	OK
Undrained R/A' =	0.00	0.00	

Use rectangular pressure distribution under the base at ULS (see EN 1997-1:2004 Annex D Figure D.1)

Effective foundation breadth for Comb.1; B' = B-2e = 4.634

Effective foundation breadth for Comb.2; B' = B-2e = 4.036

WALL DESIGN *(Notation: Positive moments produce tension in rear face of wall.)*

(Using K_0 Pressures)		Comb.1	Comb.2	Permanent	Surcharge	Variable		Comb.1	Comb.2
Section	Depth (m)	ULS Shear	ULS Shear	SLS Moment	SLS Moment	SLS Moment	SLS Moment	ULS Moment	ULS Moment
(Z-Zw)/2	1.000	61.79	52.87	1.35	0.00	40.91	42.26	57.41	48.99
Z-Zw	2.000	68.10	66.06	10.80	0.00	56.25	67.05	93.44	80.23
Zw/8	2.829	98.07	93.17	40.92	82.21	4.45	127.58	180.16	172.80
Zw/4	3.658	137.04	128.28	76.42	111.31	4.45	192.18	276.96	264.01
3Zw/8	4.486	185.04	171.40	132.28	142.68	4.45	279.41	409.80	387.64
Zw/2	5.315	242.05	222.52	213.10	176.33	4.45	393.87	586.15	550.31
5Zw/8	6.144	308.07	281.66	323.49	212.25	4.45	540.19	813.48	758.68
3Zw/4	6.973	383.11	348.79	468.08	250.43	4.45	722.96	1099.27	1019.37
7Zw/8	7.801	467.16	423.94	651.47	290.90	4.45	946.81	1450.97	1339.02
Splay top	8.630	560.23	507.09	878.26	333.63	4.45	1216.34	1876.08	1724.26
Zw	8.630	560.23	507.09	878.26	333.63	4.45	1216.34	1876.08	1724.26

BASE DESIGN

	SLS	Comb.1	Comb.2
Bearing Pressure at Toe :	437.38375	483.23	438.79
Bearing Pressure at d from Front of Wall :	424.94493	483.232	438.79137
Bearing Pressure at Front of Wall :	359.19686	483.23	438.79
Bearing Pressure at Back of Wall :	288.11788	483.23	438.79
Bearing Pressure at Bottom of Splay :	288.11788	483.23	438.79

Assume d = tb-75mm = 0.925

(Notation: Positive moments produce tension in bottom face of base slab.)

(Using K_0 Pressures)	Comb.1	Comb.2	Permanent	Surcgarge + Variable		Comb.1	Comb.2
Section	ULS Shear	ULS Shear	SLS Moment	SLS Moment	SLS Moment	ULS Moment	ULS Moment
At d from front of wall	78.66	72.41	4.87	1.38	6.25	6.88	6.34
At front of wall	494.43	455.17	183.69	50.03	233.72	271.94	250.34
At back of wall	327.00	393.86	-767.65	-272.58	-1040.23	-1814.71	-1611.02
At bottom of splay	327.00	393.86	-767.65	-272.58	-1040.23	-1814.71	-1611.02
B' = B - 2e (metres)	3.746	3.097					
At B' from toe	702.528	643.008					

Free Abutment - CASE 7 B/Fill + Deck Permanent Load + gr6 on deck.

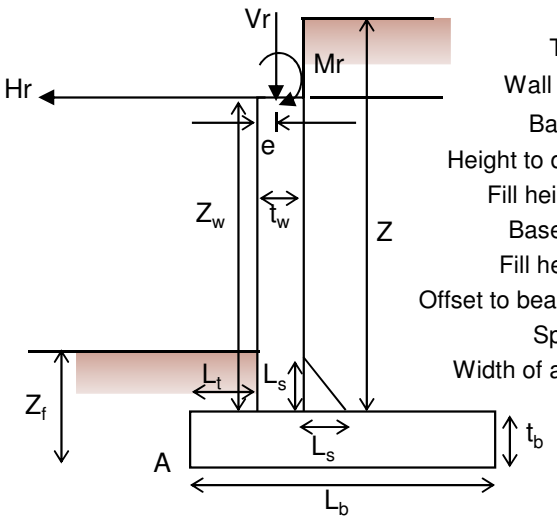

	metres			
Toe Length Lt =	1.100	$\phi'_{bf;k\ backfill}$ =	35	degrees
Wall Thickness tw =	1.000	$\gamma_{bf;k}$ =	19	kN/m^3
Base Length Lb =	6.500	$\phi'_{cv;k\ sliding}$ =	30	degrees
Height to deck soffit Zw =	6.630	γ_{conc} =	25	kN/m^3
Fill height on heel Z =	8.630	$Vr_{deck,conc}$ =	164	kN
Base thickness tb =	1.000	$Vr_{deck,steel}$ =	0	kN
Fill height at toe Zf =	0.000	$MaxVr_{s'fcg}$ =	43	kN
Offset to bearing centre e =	0.450	$MinVr_{s'fcg}$ =	17	kN
Splay length Ls =	0.000	$MaxVr_{gr1a}$ =	0	kN
Width of abutment wall =	11.600	$MinVr_{gr1a}$ =	0	kN
Lh =	4.400	$MaxVr_{gr2}$ =	0	kN
		$MinVr_{gr2}$ =	0	kN
		$Hr_{;gr2}$ =	0	kN
		$MaxVr_{gr5}$ =	0	kN
		$MinVr_{gr5}$ =	0	kN
		$MaxVr_{gr6}$ =	127	kN
		$MinVr_{gr6}$ =	0	kN
		$Hr_{;gr6}$ =	0	kN
		Mr =	0	kNm
		$Hr_{;elastomeric}$ =	0	kN
		$Hr_{;sliding}$ =	0	kN
		Carriageway width =	7.3	m

$\phi'_{bf;d\ backfill}$	SLS	Comb. 1	Comb. 2
°	35.00	35.00	29.26
Ka =	0.271	0.271	0.343
K0 =	0.426	0.426	0.511

$\phi'_{cv;k\ sliding}$	SLS	Comb. 1	Comb. 2
$\mu_d = \tan(\phi'_{cv;k})/\gamma_M$	0.577	0.577	0.462
$c_{u;k}/\gamma_{cu}$	0	0	0

FOUNDATION DESIGN

STABILITY

Minimum Vertical Actions

	V		
	SLS	Comb.1	Comb.2
Base	162.5	154.375	162.5
Wall	165.75	157.4625	165.75
$B/fill_{heel}$	721.468	685.3946	721.468
$B/fill_{toe}$	0	0	0
ΣVr	181	171.95	181
Σ	1230.718	1169.1821	1230.718

Horizontal Actions

	H			M_A		
	SLS	Comb.1	Comb.2	SLS	Comb.1	Comb.2
$B/fill_{heel}$	238.74239	386.76267	363.08681	766.36306	1241.5082	1165.5087
$B/fill_{toe}$	0	0	0	0	0	0
S/chrge	0	0	0	0	0	0
ΣHr	0	0	0	0	0	0
Mr	0	0	0	0	0	0
Σ	238.74239	386.76267	363.08681	766.36306	1241.5082	1165.5087

Sliding Resistance

	SLS	Comb.1	Comb.2		SLS	Comb.1	Comb.2
$\Sigma V\ \mu_d / \gamma_{R;h}$ =	710.55537	675.0276	568.44429	$B.c_{u;d}$ =	0	0	0
Overdesign F of S =	2.976243	1.7453277	1.5655879	O/D F of S	0	0	0
	OK	OK	OK		0	0	0

Maximum Vertical Actions

	V			M_A		
	SLS	Comb.1	Comb.2	SLS	Comb.1	Comb.2
Base	162.5	219.375	162.5	528.125	712.96875	528.125
Wall	165.75	223.7625	165.75	265.2	358.02	265.2
$B/fill_{heel}$	721.468	973.9818	721.468	3102.3124	4188.1217	3102.3124
$B/fill_{toe}$	0	0	0	0	0	0
S/chrge	0	0	0	0	0	0
ΣVr	334	444.45	353.05	517.7	688.8975	547.2275
Mr	0	0	0	0	0	0
Σ	1383.718	1861.5693	1402.768	4413.3374	5948.008	4442.8649

Eccentricity of Vertical Loads from Centre-Line of Base

	SLS	Comb.1	Comb.2
ΣM / V	0.6143659	0.7217569	0.9136505

PD 6694-1 Cl. 5.2.2 requires no uplift at SLS

Bearing Pressure at Toe at SLS = 333.60525 > 0 OK

Bearing Pressure at Heel at SLS = 92.154131 > 0 OK

Settlement Check (PD 6694-1 Cl. 5.5.2)

Drained Conditions 1/3(R/A') = 587.26664 OK

Unrained Conditions 1/3(R/A') = 0

BS EN 1997-1 Cl. 6.5.4 - Eccentricity restricted to $L_b/3$ at ULS

Lb / 3 = 2.17

Eccentricity under Comb.1 = 0.72 < 2.17 OK

Eccentricity under Comb.2 = 0.91 < 2.17 OK

	Comb.1	Comb.2	
Pressure at Toe at ULS =	368.15	300.21	
Drained R/A' =	1479.98	578.27	OK
Undrained R/A' =	0.00	0.00	

Use rectangular pressure distribution under the base at ULS (see EN 1997-1:2004 Annex D Figure D.1)

Effective foundation breadth for Comb.1; B' = B-2e = 5.056

Effective foundation breadth for Comb.2; B' = B-2e = 4.673

WALL DESIGN *(Notation: Positive moments produce tension in rear face of wall.)*

(Using K_0 Pressures)		Comb.1	Comb.2	Permanent	Surcharge	Variable		Comb.1	Comb.2
Section	Depth (m)	ULS Shear	ULS Shear	SLS Moment	SLS Moment	SLS Moment	SLS Moment	ULS Moment	ULS Moment
(Z-Zw)/2	1.000	61.79	52.87	1.35	0.00	40.91	42.26	57.41	48.99
Z-Zw	2.000	64.22	55.66	10.80	0.00	56.25	67.05	93.44	80.23
Zw/8	2.829	52.51	46.64	40.92	0.00	6.35	47.27	71.74	61.63
Zw/4	3.658	87.79	77.97	76.42	0.00	6.35	82.77	129.25	112.71
3Zw/8	4.486	132.08	117.31	132.28	0.00	6.35	138.63	219.74	193.08
Zw/2	5.315	185.39	164.66	213.10	0.00	6.35	219.45	350.67	309.37
5Zw/8	6.144	247.71	220.01	323.49	0.00	6.35	329.84	529.52	468.21
3Zw/4	6.973	319.05	283.36	468.08	0.00	6.35	474.43	763.74	676.24
7Zw/8	7.801	399.40	354.73	651.47	0.00	6.35	657.82	1060.83	940.10
Splay top	8.630	488.77	434.10	878.26	0.00	6.35	884.61	1428.24	1266.42
Zw	8.630	488.77	434.10	878.26	0.00	6.35	884.61	1428.24	1266.42

BASE DESIGN

	SLS	Comb.1	Comb.2
Bearing Pressure at Toe :	396.02908	433.79	363.36
Bearing Pressure at d from Front of Wall :	386.16719	433.78733	363.35583
Bearing Pressure at Front of Wall :	334.04006	433.79	363.36
Bearing Pressure at Back of Wall :	277.6864	433.79	363.36
Bearing Pressure at Bottom of Splay :	277.6864	433.79	363.36

Assume d = tb-75mm = 0.925

(Notation: Positive moments produce tension in bottom face of base slab.)

(Using K_0 Pressures)	Comb.1	Comb.2	Permanent	Surcgarge + Variable		Comb.1	Comb.2
Section	ULS Shear	ULS Shear	SLS Moment	SLS Moment	SLS Moment	ULS Moment	ULS Moment
At d from front of wall	70.01	59.21	4.87	0.76	5.63	6.13	5.18
At front of wall	440.04	372.19	183.69	28.28	211.97	242.02	204.71
At back of wall	171.87	191.75	-767.65	26.28	-741.37	-1427.85	-1266.09
At bottom of splay	171.87	191.75	-767.65	26.28	-741.37	-1427.85	-1266.09
B' = B - 2e (metres)	4.291	3.861					
At B' from toe	563.426	498.769					